REV.	ECN. NO.	APPD.

RoHS compliant

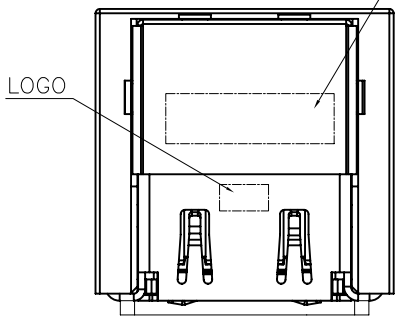

DATE CODE

DATE CODE(YYWW)1:
YYWW
WEEK
YEAR

DATE CODE(MMDDYY)2:
MMDDYY
YEAR
DAY
MONTH

DATE CODE 3(YYWW K):
YYWW K
WEEK
YEAR

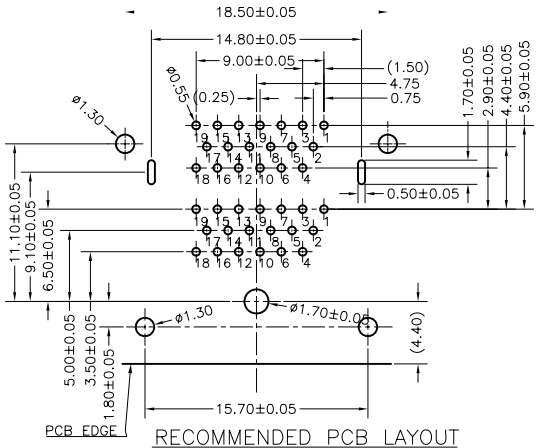

RECOMMENDED PCB LAYOUT
(THICKNESS=1.6±0.15mm)

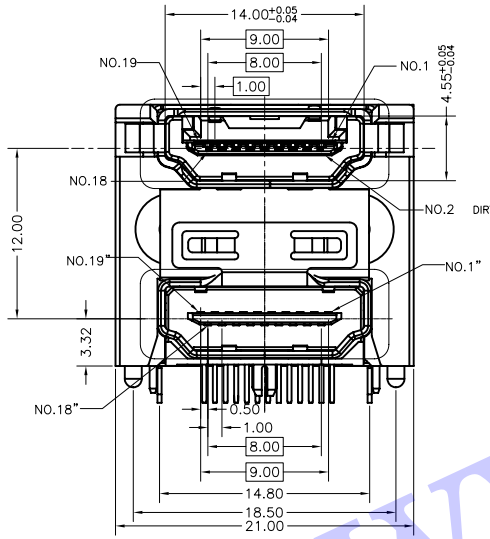

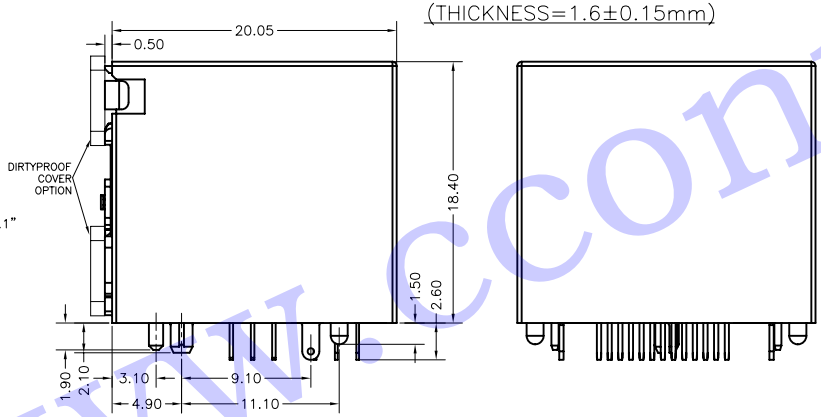

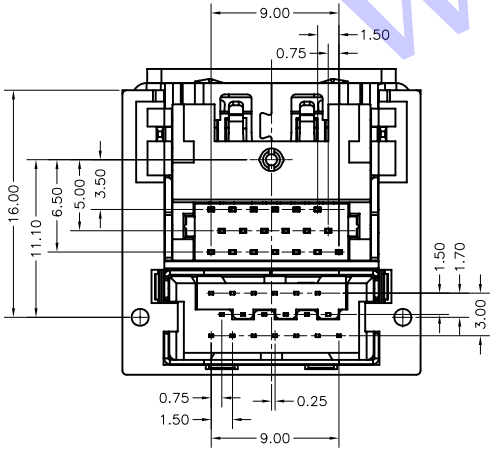

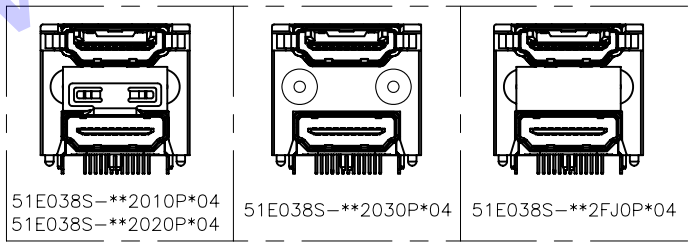

ORDERING INFORMATION

51 E 038 S − × × 2 ** 0 P × 04
(1) (2) (3)) (12)

1. SERIES NO.
   51: HDMI CONNECTOR
2. SERIES NO.
   E: DUAL HDMI STACKED CONNECTOR, THROUGH HOLE TYPE
3. PRODUCT CONSTRUCTION TYPE
   038: HDMI TO HDMI
4. CONTACT & CONNECTIONG TYPES:

5: CONTACT PLATING:
   0: GOLD FLASH IN CONTACT AREA,
      MATTE TIN PLATED IN
   2·
      MATTE TIN PLATED IN SOLDER AREA,UNDERPLATING Ni OVER ALL.

      MATTE TIN PLATED IN SOLDER AREA,UNDERPLATING Ni OVER ALL.

01:BRACKET MATERIAL IS PA10T PLASTICS

BOTTOM HDMI WITH FLANGE AND SPRING LATCH
SHELL TAIL IS THROUGH HOLE TYPE,W/O BACK LEG
THE FRONT LEG LENGTH IS 1.9mm,THE PIN

02:BRACKET MATERIAL IS PBT PLASTICS
UPPER SHELL TAIL IS THROUGH HOLE TYPE
BOTTOM HDMI WITH FLANGE AND SPRING LATCH
SHELL TAIL IS THROUGH HOLE TYPE,W/O BACK LEG
THE FRONT LEG LENGTH IS 1.9mm,THE PIN LENGTH IS 2.6mm

03:BRACKET MATERIAL IS PBT PLASTICS,WITHOUT EMI SPRING
SHELL TAIL IS THROUGH HOLE TYPE W/O FLANGE AND SPRING LATCH
BOTTOM SHELL TAIL IS THROUGH HOLE TYPE,W/O BACK LEG
THE FRONT LEG LENGTH IS 1.9mm,THE PIN LENGTH IS 2.6mm

FJ:BRACKET MATERIAL IS PBT PLASTICS
UPPER SHELL TAIL IS THROUGH HOLE TYPE
BOTTOM HDMI WITHOUT FLANGE OR SPRING LATCH
SHELL TAIL IS THROUGH HOLE TYPE,W/O BACK LEG
THE FRONT LEG LENGTH IS 1.9mm,THE PIN LENGTH IS 2.6mm

9: SUFFIX No.2
   0: LEVEL 0

A: WITH OUT LOGO AND DIRTYPROOF COVER, D/C
J: WITH OUT DIRTYPROOF COVER AND LOGO, WITH D/C3
4: WITH OUT DIRTYPROOF COVER AND LOGO, WITH D/C1
F: WITH DIRTYPROOF COVER AND LOGO, WITH OUT D/C
9: WITH OUT FREPRT LOGO AND D

12: SUFFIX No.4
   04: SERIAL NUMBER

SPECIFICATIONS

SPECIFICATIONS
OPERATING CURRENT: 0.5A MAX.
OPERATION TEMPERATURE: −25°C TO +85°C
DIELECTRIC WITHSTANDING VOLTAGE:
  500Volts AC BETWEEN ADIACENT TERMINAL(UNMATE)
  300Volts AC BETWEEN ADIACENT TERMINAL(MATE)
INSULATION RESISTANCE:
  100Mohm MIN.(UNMATED);10Mohm MIN.(MATED)

X. ±0.50	X.° ± 2°	UNITS mm	深圳市创粤科技有限公司
.X ±0.30	.X° ± 1°		TITLE: HDMI 19PIN 90度双层母座
.XX ±0.10	.XX° ± 0.5°	MAT'L	
.XXX ± 0.05			
THESE DRAWINGS AND SPECIFICATIONS ARE THE PROPERTY OF CHUANGYUE TECHNOLOGY CO.,LTD. AND SHALL NOT BE REPROOUCED. COPIED OR USED IN ANY MANNER WITHOUT THE PRIOR WRITTEN CONSENT OF CHUANGYUE TECHNOLOGY CO., LTD		FINISH	APPD:
		Q'TY	CHKD:
			DR: Steven.Xie 2018/10/07

DWG NO.: CY-LHFD-38A-184

SCALE	SHEET	REV.
1/1	1/1	A1

www.cconn.cc